Work Order ID 58486

May 7, 2010 1:34:40 PM

Item ID: D212-664-201TRN
Revision ID:
Item Name: Crosstube Turning Detail
Start Date: 07/05/2010 **Start Qty:** 1.00
Required Date: 20/05/2010 **Req'd Qty:** 1.00
Reference:

Accept

Setup Start
Stop

Cust Item ID:
Customer:

Approvals: **Process Plan:** H **Date:** 10-5-07 **Tooling:** _____ **Date:** _____
QC: _____ **Date:** _____ **SPC (Y/N):** _____ **Date:** _____

Run Start
Stop

Sequence ID/ Work Center ID	Operation Description	Set Up/ Run Hours	Draw Number	Draw Rev.	Plan Code	Accept Qty	Reject Qty	Reject Number	Insp. Stamp
Draw Nbr / **Revision Nbr**									
D212-664-241 / Rev D									
100	MORI SEIKI CNC LATHE LARGE	0.00							
Mori Seiki	**Memo**	0.00							
Mori Seiki CNC Lathe Large	1-Fill tube with sand & install plugs DT8534 on both ends as per Folio FA114 2-Turn first side as per Folio FA114 3- File transition lines smooth.					a.m	10	05	11 6
110	QC1- Inspect dimensions to dimension sheet	0.00							
QC	**Memo**	0.00							
Quality Control						a.m	10	05	11 6
120	MORI SEIKI CNC LATHE LARGE	0.00							
Mori Seiki	**Memo**	0.00							
Mori Seiki CNC Lathe Large	1-Turn second side as per Folio FA114 2- File transition lines smooth. 3-Remove sand and plugs 4- scribe batch # and part # as per dwg					a.m	10	05	11 6

Dart Aerospace Ltd

W/O:			WORK ORDER CHANGES					
DATE	STEP		PROCEDURE CHANGE	By	Date	Qty	Approval Chief Eng / Prod Mgr	Approval QC Inspector

Part No: _____ PAR #: _____ Fault Category: _____ NCR: Yes No DQA: _____ Date: _____

Resolution: _____ Disposition: _____ QA: N/C Closed: _____ Date: _____

NCR:			WORK ORDER NON-CONFORMANCE (NCR)						
DATE	STEP		Description of NC Section A	Corrective Action Section B			Verification Section C	Approval Chief Eng	Approval QC Inspector
				Initial Chief Eng	Action Description Chief Eng	Sign & Date			

NOTE: Date & initial all entries

H:\fFORMS\Quality Assurance\approved QA\NCRWO RevE

Work Order ID 58486

May 7, 2010 1:34:40 PM

Item ID: D212-664-201TRN **Accept** **Setup Start**

Revision ID: **Stop**

Item Name: Crosstube Turning Detail

Start Date: 07/05/2010 **Start Qty:** 1.00 **Cust Item ID:**

Required Date: 20/05/2010 **Req'd Qty:** 1.00 **Customer:**

Reference:

Run Start

Approvals: **Process Plan:** _____ **Date:** _____ **Tooling:** _____ **Date:** _____

Stop

QC: _____ **Date:** _____ **SPC (Y/N):** _____ **Date:** _____

Sequence ID/ Work Center ID	Operation Description	Set Up/ Run Hours	Draw Number	Draw Rev.	Plan Code	Accept Qty	Reject Qty	Reject Number	Insp. Stamp
130	QC1- Inspect dimensions to dimension sheet	0.00							
QC	Memo	0.00				0.1	10	05	11
Quality Control									
140	QC8- Inspect parts - second check	0.00				1	—	—	Awm 10-5-11
QC	Memo	0.00							
Quality Control									
150	Crosstubes Chemical Conversion	0.00				1	—	—	Awm 10-5-11
HandFXtube	Memo	0.00							
Hand Finishing Crosstubes	Chemical Conversion Coat as per within 24 hours of machining								

Dart Aerospace Ltd

W/O:			WORK ORDER CHANGES					
DATE	STEP		PROCEDURE CHANGE	By	Date	Qty	Approval Chief Eng / Prod Mgr	Approval QC Inspector

Part No: _____ PAR #: _____ Fault Category: _____ NCR: Yes No DQA: _____ Date: _____

Resolution: _____ Disposition: _____ QA: N/C Closed: _____ Date: _____

NCR:			WORK ORDER NON-CONFORMANCE (NCR)						
DATE	STEP		Description of NC Section A	Corrective Action Section B			Verification Section C	Approval Chief Eng	Approval QC Inspector
				Initial Chief Eng	Action Description Chief Eng	Sign & Date			

NOTE: Date & initial all entries

H:\fFORMS\Quality Assurance\approved QA\NCRWO RevE

Work Order ID 58486

May 7, 2010 1:34:40 PM

Item ID: D212-664-201TRN **Accept** **Setup Start**

Revision ID: **Stop**

Item Name: Crosstube Turning Detail

Start Date: 07/05/2010 **Start Qty:** 1.00 **Cust Item ID:**

Required Date: 20/05/2010 **Req'd Qty:** 1.00 **Customer:**

Reference:

Approvals: **Process Plan:** _____ **Date:** _____ **Tooling:** _____ **Date:** _____ **Run Start**

QC: _____ **Date:** _____ **SPC (Y/N):** _____ **Date:** _____ **Stop**

Sequence ID/ Work Center ID	Operation Description	Set Up/ Run Hours	Draw Number	Draw Rev.	Plan Code	Accept Qty	Reject Qty	Reject Number	Insp. Stamp
160	QC3- Inspect Part Finish	0.00							
QC						14	0	MB	10-05-13
Quality Control	**Memo**	0.00							
170		0.00							
Packaging	Packaging								
Packaging						1	–	–	AWM 10-5-13
	Memo	0.00							
	Identify and stock in kanban rack Location: X-TUBE CELL								
180	QC21- Final Inspection - Work Order Release	0.00							
QC								10/05/13	
Quality Control	**Memo**	0.00							
								MF 10-5-13	

Dart Aerospace Ltd

W/O:			WORK ORDER CHANGES					
DATE	STEP		PROCEDURE CHANGE	By	Date	Qty	Approval Chief Eng / Prod Mgr	Approval QC Inspector

Part No: _____ PAR #: _____ Fault Category: _____ NCR: Yes No DQA: _____ Date: _____

Resolution _____ Disposition: _____ QA: N/C Closed: _____ Date: _____

NCR:			WORK ORDER NON-CONFORMANCE (NCR)						
DATE	STEP		Description of NC Section A	Corrective Action Section B			Verification Section C	Approval Chief Eng	Approval QC Inspector
				Initial Chief Eng	Action Description Chief Eng	Sign & Date			

NOTE: Date & initial all entries

H:\fFORMS\Quality Assurance\approved QA\NCRWO RevE

Picklist Print

May 7, 2010 1:34:45 PM

Work Order ID: 58486

Parent Item: D212-664-201TRN

Parent Item Name: Crosstube Turning Detail

Comments: IPP Rev:A 08-03-06 new issue DD verified by:ec
IPP Rev B 08.04.02 Removed polish EC verified DD

Start Date: 07/05/2010 **Required Date:** 20/05/2010

Start Qty: 1.00 **Required Qty:** 1.00

Component Item ID/ Item Name	Replacement Item ID	Mfg/ Purch	Bin Item	Primary Location	Last Location	Route Seq ID	Unit of Measure	Qty on Hand	Qty per Kit	Qty Issued	Date Issued	Status
D6006-129		Manufactured	No			120	Each	47.0000	1			
Crosstube Material										a.n	10-05-11	G

Location	Loc Qty	Loc Code	
LG	47		
23970	2		
26550	14		
34690	11		
38338	20		1

Dart Aerospace Ltd

W/O:			WORK ORDER CHANGES					
DATE	STEP		PROCEDURE CHANGE	By	Date	Qty	Approval Chief Eng / Prod Mgr	Approval QC Inspector

Part No: _____ PAR #: _____ Fault Category: _____ NCR: Yes No DQA: _____ Date: _____

Resolution _____ Disposition: _____ QA: N/C Closed: _____ Date: _____

NCR:			WORK ORDER NON-CONFORMANCE (NCR)						
DATE	STEP		Description of NC Section A	Corrective Action Section B			Verification Section C	Approval Chief Eng	Approval QC Inspector
				Initial Chief Eng	Action Description Chief Eng	Sign & Date			

NOTE: Date & initial all entries

H:\fFORMS\Quality Assurance\approved QA\NCRWO RevE

DART AEROSPACE LTD	Work Order:	58486
Description: Crosstube Assembly (205/212 High Aft)	Part Number:	D212-664-241
Inspection Dwg: D212-664-241 **Rev:** C		Page 1 of 1

FIRST ARTICLE INSPECTION CHECKLIST

[X] First Article [ ] Prototype

	Inspection Sheet Drawing Dimension	Tolerance	Actual Dimension	Accept	Reject	Method of Inspection	Comments
SIDE A	0.200	+/-0.010	0.200	✓			
	R0.063	+/-0.010	R0.063	✓			
	2.990	+0.005/-0.000	2.991	✓			
	5.237	+/-0.030	5.237	✓			
	2.600	+0.005/-0.000	2.605	✓			
	2.686	+0.005/-0.000	2.689	✓			
	2.770	+0.005/-0.000	2.775	✓			
	2.854	+0.005/-0.000	2.859	✓			
	2.938	+0.005/-0.000	2.943	✓			
	3.021	+0.005/-0.000	3.026	✓			
	3.133	+0.005/-0.000	3.137	✓			
	3.179	+0.005/-0.000	3.183	✓			
SIDE B	0.200	+/-0.010	0.200	✓			
	R0.063	+/-0.010	R0.063	✓			
	2.990	+0.005/-0.000	2.991	✓			
	5.237	+/-0.030	5.237	✓			
	2.600	+0.005/-0.000	2.605	✓			
	2.686	+0.005/-0.000	2.689	✓			
	2.770	+0.005/-0.000	2.775	✓			
	2.854	+0.005/-0.000	2.859	✓			
	2.938	+0.005/-0.000	2.943	✓			
	3.021	+0.005/-0.000	3.026	✓			
	3.133	+0.005/-0.000	3.137	✓			
	3.179	+0.005/-0.000	3.183	✓			
	124.36	+/-0.020	124.360	✓			

Measured by:	Q.M	Audited by:	AWM	Prototype Approval:	N/A
Date:	10.05.11	Date:	10-5-11	Date:	N/A

Rev	Date	Change	Revised by	Approved
A	05.04.27	New Issue (P/O D412-664-201)	KJ/JLM	
B	06.03.09	Tolerance for 5.237 was +/-0.001	KJ/JLM	
C	07.05.08	Dwg Rev. updated	KJ/JLM	

Dart Aerospace Ltd

W/O:		WORK ORDER CHANGES					
DATE	STEP	PROCEDURE CHANGE	By	Date	Qty	Approval Chief Eng / Prod Mgr	Approval QC Inspector

Part No: _____ **PAR #:** _____ **Fault Category:** _____ **NCR:** Yes No **DQA:** _____ **Date:** _____

Resolution: _____ **Disposition:** _____ **QA: N/C Closed:** _____ **Date:** _____

NCR:		WORK ORDER NON-CONFORMANCE (NCR)						
DATE	STEP	Description of NC Section A	Corrective Action Section B			Verification Section C	Approval Chief Eng	Approval QC Inspector
			Initial Chief Eng	Action Description Chief Eng	Sign & Date			

NOTE: Date & initial all entries

H:\fFORMS\Quality Assurance\approved QA\NCRWO RevE

Item	Qty -241	Qty -241B	Part Number	Description
1	X		D212-664-241	CROSSTUBE ASSEMBLY (205/212 HIGH AFT)
2		X	D212-664-241B	CROSSTUBE ASSEMBLY (214 HIGH AFT)
3	1	1	D6006-129	CROSSTUBE
4	2	2	D2940-1	SUPPORT
5	4	4	D3595-063-530	RUBBER CUSHION
6	4	4	MS21920-28	CLAMP (OR MS21920-30)
7	A/R	A/R	MAGNOBOND 6398	ROCKWELL SPECIFICATION RBO-120-023 ADHESIVE (TEXTRON/BELL SPEC. 299-947-100, TYPE II, CLASS 2 ADHESIVE)

GENERAL NOTES:

1) MATERIAL: MANUFACTURED FROM D6006-129
   FINISHED LENGTH = 124.362±0.020
2) FINISH: CHEMICAL CONVERSION COAT PER DART QSI 005 4.1
   PRIME INSIDE AND OUTSIDE PER DART QSI 005 4.2
   PAINT OUTSIDE PER DART QSI 005 4.2
3) TOLERANCES ARE PER DART QSI 018 UNLESS OTHERWISE NOTED.
4) UNITS: INCHES UNLESS OTHERWISE NOTED.
5) BREAK SHARP EDGES: 0.005 TO 0.010 MAX.
6) IDENTIFICATION: SCRIBE DART PART NUMBER "D212-664-XXX" AND BATCH NUMBER ON INSIDE OF CUFF USING VIBRATING STYLUS.
7) WEIGHT: D212-664-241 = 44.2 lbs (PER IIN-D212-664)
   D212-664-241B = 44.2 lbs (PER IIN-D212-664)
8) PART IS SYMMETRIC ABOUT CENTERLINE.
9) RUN CUTTER OFF PART. BLEND OUT EDGE LONGITUDINALY, TRANSITION SHOULD BE SMOOTH.
10) BEND PROGRESSIVELY WITH A MINIMUM OF 5 PASSES. MAXIMUM TUBE FLATTENING DUE TO BENDING IS 6% BASED ON O.D.
11) LIQUID PENETRANT INSPECT OUTSIDE SURFACE OF CROSSTUBE PER QSI 038.
12) INSTALL D2940-1 SUPPORT USING 0.03" TO 0.06" THICK LAYER OF MAGNOBOND 6398 TO THE SURFACE OF D2940-1 THAT WILL BE IN CONTACT WITH THE CROSSTUBE PER QSI 015. LET CURE FOR 12 HOURS AFTER INSTALLATION AND PRIOR TO PACKAGING.
13) INSTALL MS21920-28 CLAMPS (OR -30) WITH D3595-063-530 RUBBER CUSHIONS TO SECURE THE D2940-1 SUPPORT ON TOP SIDE OF THE CROSSTUBE. ENSURE CLAMPS ARE OPPOSITE OF CROSSTUBE SUPPORT.
14) EXTREME CARE MUST BE TAKEN TO PROTECT THE OUTSIDE SURFACE OF THE TUBE. THE OUTSIDE SURFACE MUST BE SMOOTH AND FREE FROM SURFACE DEFECTS SUCH AS SCRATCHES, NICKS, OR DENTS. DEFECTS UP TO 0.005" MAY BE BLENDED OUT LONGITUDINALLY. CIRCUMFERENTIAL GRIND MARKS ARE UNACCEPTABLE.
15) TORQUE CLAMPS 80 TO 100 IN-LB. ENSURE AT LEAST 1.5 THREADS SHOWING IN SAFETY AND THAT NUT HAS NOT BOTTOMED-OUT AFTER TORQUING.

SHOP COPY
RETURN TO
ENGINEERING
UNCONTROLLED COPY
SUBJECT TO AMENDMENT
WITHOUT NOTICE
WORK ORDER
NO. 58486
10-5-09

RELEASED
2009-10-29

REV.	DESCRIPTION	BY	DATE
D	REFORMAT/REVISE GENERAL NOTES/PART LIST; REORGANIZED VIEWS AND REFORMATTED DRAWING TO CURRENT STANDARDS; ADD -241B (ZN D4-2, B4-2); REMOVED REF & ADD TOLERANCES (ZN D8-3 & C4-3, C6-3 & A8-3); RELOCATED FLAG #6 PER PAR 08-046 (ZN A5-3); MOVED TURNING DETAIL & UPDATED TOLERANCE TO SHEET 4	RF	09.09.30
C	REMOVE -1009 ABRASION STRIP; ADD MAGNOBOND 6398, CUSHION, REVERSE CLAMPS	PH	07.03.08
B	ADD HOLES FOR COMPATABILITY WITH BHT/AA SKIDTUBES	PH	05.02.04
A	NEW ISSUE	PH	00.12.12

DESIGN	PH	DART AEROSPACE LTD HAWKESBURY, ONTARIO, CANADA
DRAWN	RF	
CHECKED		DRAWING NO. REV. D
MFG. APPR.		D212-664-241 SHEET 1 OF 4
APPROVED		TITLE SCALE
DE APPR.		CROSSTUBE ASS'Y (205/212 HI AFT) NTS
DATE	09.09.30	

Dart Aerospace Ltd

W/O:			WORK ORDER CHANGES					
DATE	STEP		PROCEDURE CHANGE	By	Date	Qty	Approval Chief Eng / Prod Mgr	Approval QC Inspector

Part No: _____ **PAR #:** _____ **Fault Category:** _____ **NCR:** Yes No **DQA:** _____ **Date:** _____

Resolution: _____ **Disposition:** _____ **QA: N/C Closed:** _____ **Date:** _____

NCR:			WORK ORDER NON-CONFORMANCE (NCR)						
DATE	STEP	Description of NC Section A	Corrective Action Section B				Verification Section C	Approval Chief Eng	Approval QC Inspector
			Initial Chief Eng	Action Description Chief Eng	Sign & Date				

NOTE: Date & initial all entries

H:\fFORMS\Quality Assurance\approved QA\NCRWO RevE

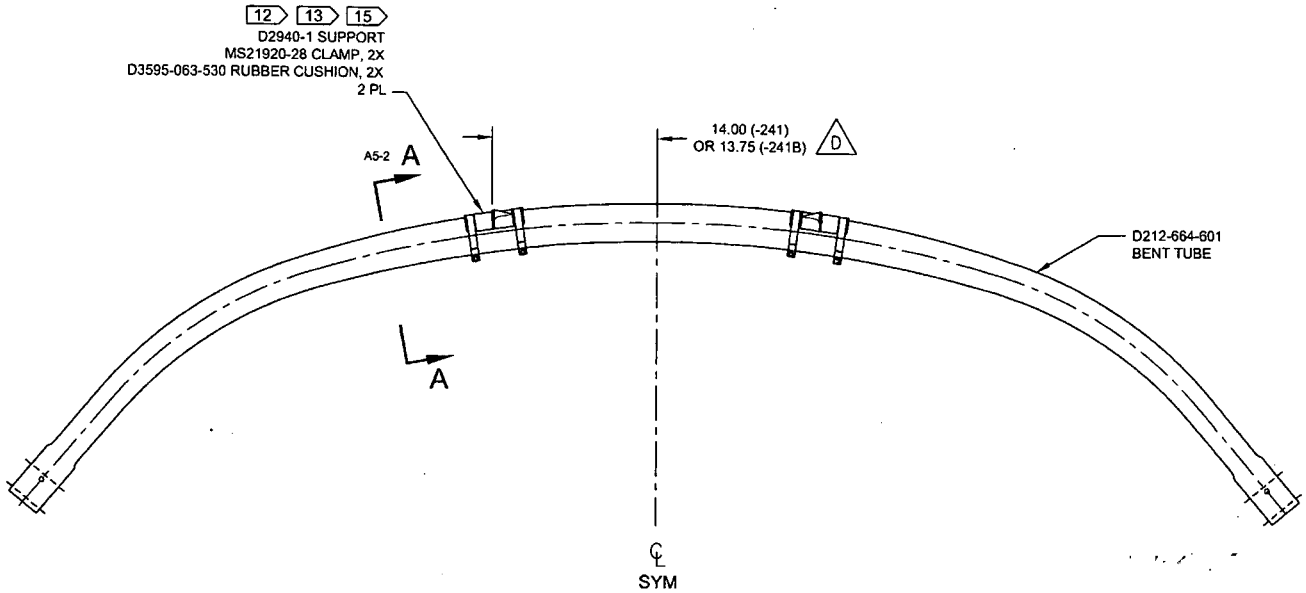

D212-664-241/-241B
ASSEMBLY DETAIL D

w/o 58486

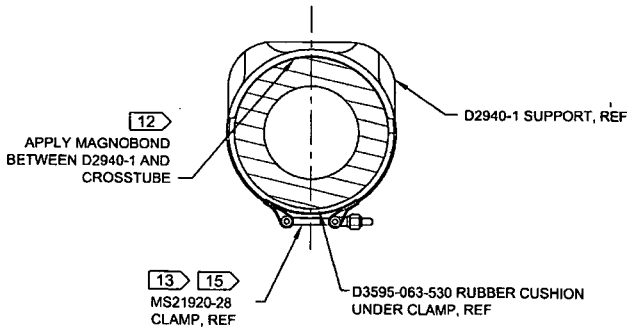

SECTION A-A D6-2
SCALE 4X

RELEASED
2009 -10- 28

DESIGN	PH	**DART AEROSPACE LTD** HAWKESBURY, ONTARIO, CANADA
DRAWN	RF	
CHECKED		DRAWING NO. D212-664-241 — REV. D — SHEET 2 OF 4
MFG. APPR.		
APPROVED		TITLE: CROSSTUBE ASS'Y (205/212 HI AFT) — SCALE: NTS
DE APPR.		
DATE	09.09.30	

Dart Aerospace Ltd

W/O:			WORK ORDER CHANGES					
DATE	STEP		PROCEDURE CHANGE	By	Date	Qty	Approval Chief Eng / Prod Mgr	Approval QC Inspector

Part No: _____ **PAR #:** _____ **Fault Category:** _____ **NCR:** Yes No **DQA:** _____ **Date:** _____

Resolution: _____ **Disposition:** _____ **QA: N/C Closed:** _____ **Date:** _____

NCR:			WORK ORDER NON-CONFORMANCE (NCR)						
DATE	STEP		Description of NC Section A	Corrective Action Section B			Verification Section C	Approval Chief Eng	Approval QC Inspector
				Initial Chief Eng	Action Description Chief Eng	Sign & Date			

NOTE: Date & initial all entries

H:\fFORMS\Quality Assurance\approved QA\NCRWO RevE

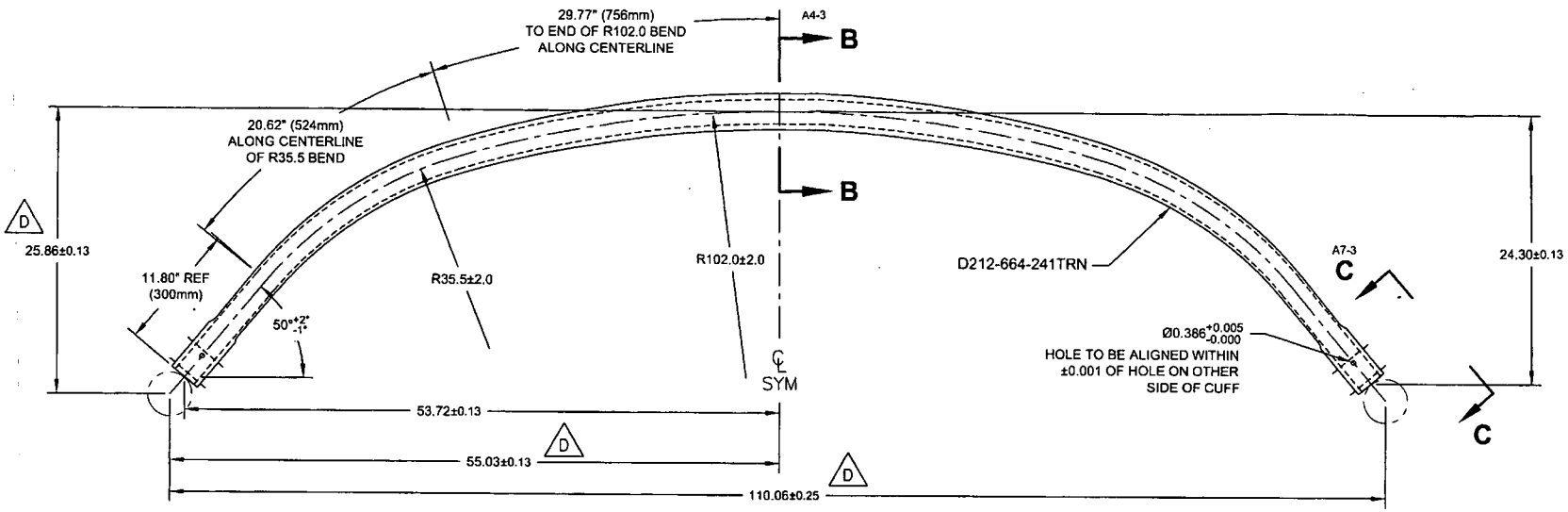

D212-664-601 10 D
BENDING AND DRILLING DETAIL

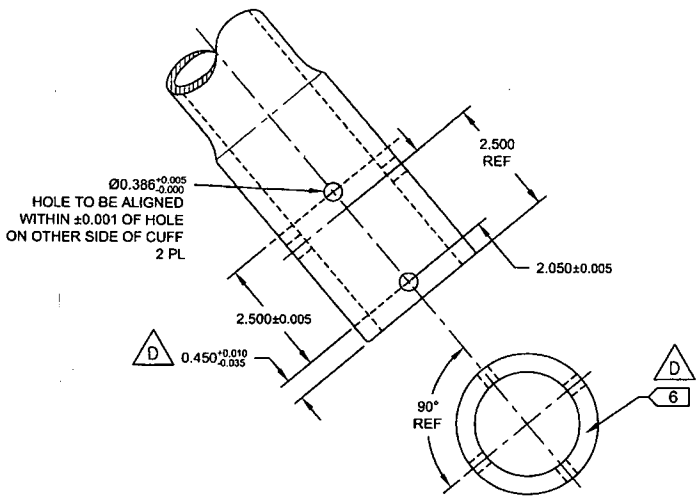

VIEW C-C: CUFF DETAIL D2-3
SCALE 3X

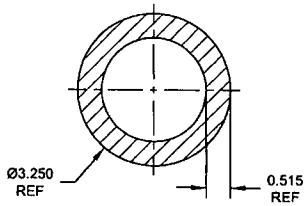

SECTION B-B D4-3
SCALE 4X

w/o 58486

RELEASED
2009 -10- 29

DESIGN	PH	**DART AEROSPACE LTD** HAWKESBURY, ONTARIO, CANADA
DRAWN	RF	
CHECKED		DRAWING NO. REV. D
MFG. APPR.		D212-664-241 SHEET 3 OF 4
APPROVED		TITLE SCALE
DE APPR.		CROSSTUBE ASS'Y (205/212 HI AFT) NTS
DATE	09.09.30	

Dart Aerospace Ltd

W/O:			WORK ORDER CHANGES					
DATE	STEP		PROCEDURE CHANGE	By	Date	Qty	Approval Chief Eng / Prod Mgr	Approval QC Inspector

Part No: _____ **PAR #:** _____ **Fault Category:** _____ **NCR:** Yes No **DQA:** _____ **Date:** _____

Resolution: _____ **Disposition:** _____ **QA: N/C Closed:** _____ **Date:** _____

NCR:			WORK ORDER NON-CONFORMANCE (NCR)						
DATE	STEP		Description of NC Section A	Corrective Action Section B			Verification Section C	Approval Chief Eng	Approval QC Inspector
				Initial Chief Eng	Action Description Chief Eng	Sign & Date			

NOTE: Date & initial all entries

H:\fFORMS\Quality Assurance\approved QA\NCRWO RevE

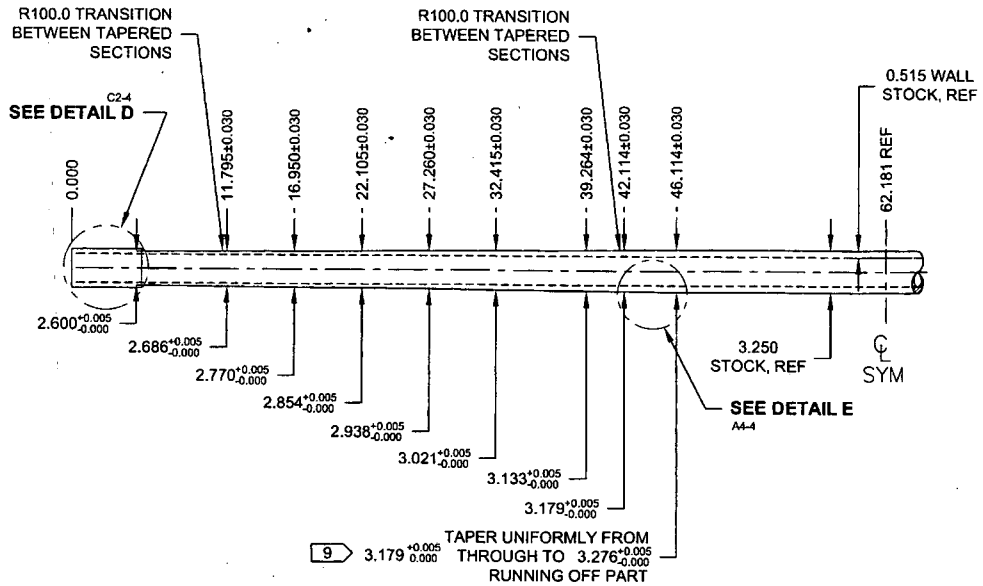

D212-664-241TRN TURNING DETAIL

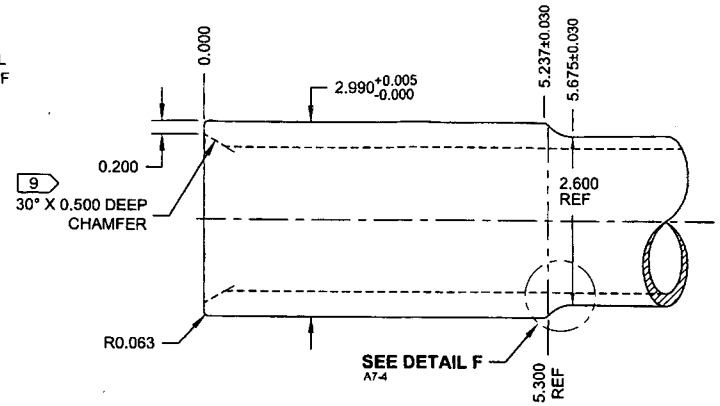

DETAIL D: CROSSTUBE CUFF D8-4
SCALE 5X

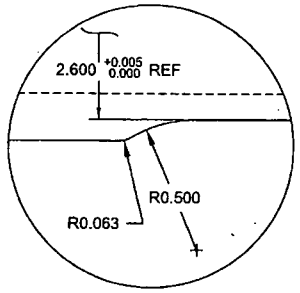

DETAIL F: CUFF TRANSITION C2-4
SCALE 10X

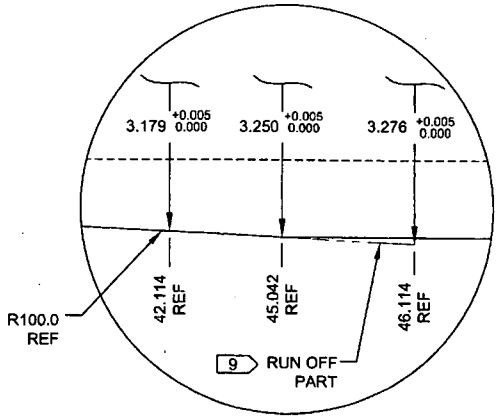

DETAIL E: TAPER RUN-OFF C5-4
NOT TO SCALE

RELEASED 2009-10-29

w/o 58484

DESIGN	PH	DART AEROSPACE LTD HAWKESBURY, ONTARIO, CANADA
DRAWN	RF	
CHECKED		DRAWING NO. D212-664-241 — REV. D — SHEET 4 OF 4
MFG. APPR.		
APPROVED		TITLE: CROSSTUBE ASS'Y (205/212 HI AFT) — SCALE: NTS
DE APPR.		
DATE	09.09.30	

Dart Aerospace Ltd

W/O:			WORK ORDER CHANGES					
DATE	STEP		PROCEDURE CHANGE	By	Date	Qty	Approval Chief Eng / Prod Mgr	Approval QC Inspector

Part No: _____ PAR #: _____ Fault Category: _____ NCR: Yes No DQA: _____ Date: _____

Resolution: _____ Disposition: _____ QA: N/C Closed: _____ Date: _____

NCR:			WORK ORDER NON-CONFORMANCE (NCR)						
DATE	STEP		Description of NC Section A	Corrective Action Section B			Verification Section C	Approval Chief Eng	Approval QC Inspector
				Initial Chief Eng	Action Description Chief Eng	Sign & Date			

NOTE: Date & initial all entries

H:\fFORMS\Quality Assurance\approved QA\NCRWO RevE